M17 Circular connector

630V- 20A

Technical characteristics

Specifications	
Specifications	DIN EN 60 664 DIN EN 61 984
Approvals	

Electrical data		Mechanical date	
Number of contacts	4(3+PE)	Housing material	copper alloy,zinc alloy
Rated current	20A	Housing surface	Nickel-plated
mm^2/ AWG	(0.35-2.5 mm^2 / AWG 22-14)	Contact resistance	≤ 5 mΩ
Rated voltage	630V	Insulating bodies	PBT
Rated impulse voltage	6kV	Contact material	copper alloy
Pollution degree	3	Contact surface	gold plated
Flammability acc. to UL 94	V0 (UL94)	Mechanical working life	>500
Overvoltage categorie	III	Degree of protection	IP67
		Temperature range	-40°C ...+130°C

Male，Crimp terminal

order crimp contacts separately

Contacts	Designation	Order No.
4(3+PE)	M17-MC04-BK21.6-OD2.7	165 004 310 1001

Female，Crimp terminal

order crimp contacts separately

Contacts	Designation	Order No.
4(3+PE)	M17-FC04-BK21.6-OD2.7	165 004 320 2500

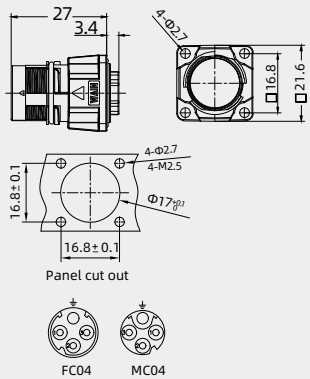

Crimp contacts

Crimp contacts 20A

20A

Wire gauge(mm^2)	Male	Order No.
0.35-2.5	M17-MC20G-2.5	101 020 210 1002

Wire gauge(mm^2)	Female	Order No.
0.35-2.5	M17-FC20G-2.5	101 020 220 1002

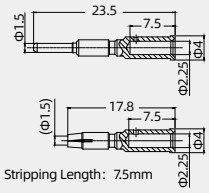

Tools

Crimping tool

Wire gauge	Designation	Order No.
0.14-4 mm^2	TL28-2	198 001 001 0039

Notes: The tools for crimp terminal may influence the product quality and stability. Please select the tools recognized by our company.